PowerWalker VFI 10K-80K CPG PF1 3/3

Uninterruptible Power Supply System

Version: 1.0 .1

Table of Contents

Please comply with all warnings and operating instructions in this manual. This equipment should only be installed, serviced, and maintained by qualified personnel. Do not operate this unit before reading through all safety information and operating instructions carefully.

Disclaimer

We assume no responsibility or liability for loss or damages, whether direct, indirect, consequential or incidental, which might arise out of the use of such information. The use of any such information will be entirely at the user's risk. Information in this manual is subject to change without notice. We make no commitment to update or keep current the information in this manual. If you find information in this manual that is incorrect, misleading, or incomplete, we would appreciate your comments and suggestions.

1. Safety and EMC instructions

All safety instructions in this document must be read, understood and followed.

1-1. Transportation and Storage

⚠ Please transport the UPS system only in the original packaging to protect against shock and damage.
⚠ The UPS must be stored in the room where the temperature is well regulated. Ambient temperature should not exceed 40°C.

1-2. Preparation

⚠ Condensation may from if the UPS system is moved from cold to warm environment immediately. The UPS system must be absolutely dry before being installed. Please allow at least two hours for the UPS system to acclimate the environment.
⚠ Do not install the UPS system near water or in moist environments.
⚠ Do not install the UPS system where it would be exposed to direct sunlight or nearby heat source.
⚠ Do not block ventilation holes on the UPS housing.

1-3. Installation

⚠ Do not connect appliances or devices which would overload the UPS (e.g. big motor-type equipment) to the UPS output terminal.
⚠ Place cables in such a way that no one can step on or trip over them.
⚠ Do not block air vents on the housing of the UPS. Ensure proper unit spacing of ventilation.
⚠ UPS equipped with grounding terminal, in the final installation phase, connect grounding wire to the external UPS battery cabinets or appropriate grounding terminals.
⚠ The UPS can be installed only by qualified maintenance personnel.
⚠ An appropriate disconnect device such as short-circuit backup protection should be incorporated during installation.
⚠ An integral emergency shutoff switch which prevents additional load from the UPS in any mode of operation should be implemented during the installation.
⚠ Secure the grounding wire before connecting to any live wire terminal.
⚠ Installation and Wiring must be in accordance with the local electrical laws and regulations.

1-4. Connection Warnings

- There is no standard backfeed protection inside of the UPS. However, there are relays on the Input to cut off line voltage and while the neutral is still connect to UPS.

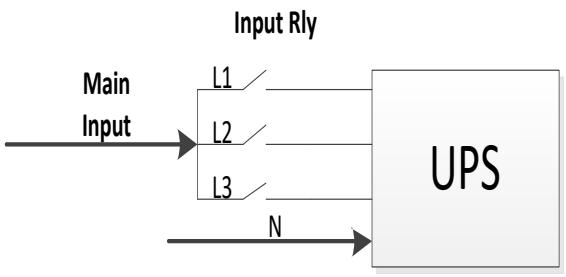

Input relay diagram

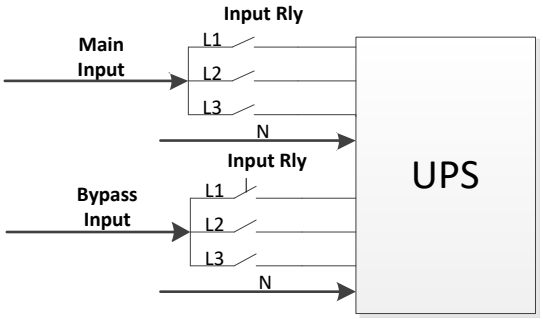

Input relay diagram for dual-input model

- This UPS should be connected with **TN** grounding system.
- The power input for this unit must be three-phase rated in accordance with the equipment nameplate. It also must be suitably grounded.

WARNING
HIGH LEAKAGE CURRENT
EARTH CONNECTION ESSENTIAL
BEFORE CONNECTING SUPPLY

- Use of this equipment in medical instrument of any life-sustaining equipment where failure of this equipment

can reasonably be expected to cause the failure of the life-sustaining equipment or to significantly affect its safety or effectiveness is not recommended. Do not use this equipment in the presence of a flammable mixture with air, oxygen or nitrous oxide.

- Connect grounding terminal of UPS to a grounding electrode conductor.
- In accordance with safety standard EN-IEC 62040-1, installation has to be provided with a《Backfeed Protection》 system, as for example a contactor, which will prevent the appearance of voltage or dangerous energy in the input mains during a mains fault (see figure 24 and respect the wiring diagram of «Backfeed Protection» depending if the equipment is with signal or three phase input).

  ⚠ There can be no derivation in the line that goes from the «Backfeed Protection» to the UPS, as the standard safety would be infringed.
- Warning labels should be placed on all primary power switches installed in places away from the unit to alert the electrical maintenance personnel of the presence of a UPS in the circuit. The label will bear the following or an equivalent text:

Before working on this circuit

- Isolate Uninterruptible Power Supply (UPS)
- Then check for Hazardous Voltage between all terminals including the protected earth

Risk of Voltage Backfeed

1-5. Operation

⚠ Do not disconnect the grounding conductor cable on the UPS or the building wiring terminals under any circumstance.

⚠ The UPS system features its own, internal current source (batteries). The UPS output sockets or output terminal blocks may be electrically live even if the UPS system is not connected to the building mains/live wires. (only for standard models)

⚠ In order to fully disconnect the UPS system, first press the "OFF" button and then disconnect the mains/live wires.

⚠ Ensure that no liquid or other foreign objects can enter into the UPS system.

⚠ The UPS can be operated by any individuals with no previous experience.

1-6. Standards

*** Safety**			
IEC/EN 62040-1			
*** EMI**			
Conducted Emission :IEC/EN 62040-2	Category C3	Radiated Emission :IEC/EN 62040-2	Category C3
***EMS**			
ESD :IEC/EN 61000-4-2	Level 4	SURGE :IEC/EN 61000-4-5	Level 4
RS :IEC/EN 61000-4-3	Level 3	CS :IEC/EN 61000-4-6	Level 3
EFT :IEC/EN 61000-4-4	Level 4	Power-frequency Magnetic field :IEC/EN 61000-4-8	Level 4
Low Frequency Signals IEC/EN 61000-2-2			
Warning: This is a product for commercial and industrial application in the second environment-installation restrictions or additional measures may be needed to prevent disturbances.			

2. Installation and Operation

These series is designed for 400VAC system. There are two different types of models: standard (BI – Battery Internal) and long-run (BX – Battery External) models. Please refer following table.

Model	Type	Model	Type
10K/15K/20K	Standard model	10KL/15KL/20KL	Long-run model
10K/15K/20K DUAL		10KL/15KL/20KL DUAL	
30K/40K		30KL/HV 40KL 30KL/HV 40KL DUAL	
30K/40K DUAL		60KL/ HV 80KL 60KL/HV 80KL DUAL	

We also offer optional parallel function for both models upon request. The UPS with parallel function is called the "Parallel model". We have detail installation and operation procedure of the Parallel Model in the following chapter.

2-1. Unpacking and Inspection

Unpack the package and check the package contents. The shipping package should contain:

- One UPS
- One user manual
- One monitoring software CD (option, please check our website)
- One RS-232 cable (option)
- One USB cable
- One parallel cable (only available for parallel model)
- One shared current cable (only available for parallel model)

NOTE: Before the installation, please inspect the unit. Be sure that there is no physical damage to the unit. Do not turn on the unit and notify the carrier and dealer immediately if there is any damage or missing parts and accessories. Please keep the original packaging for future use. It is recommended to keep each equipment and battery set in their original packaging because they have been designed to provide maximum protection during transportation and storage.

2-2. Wiring Terminal View

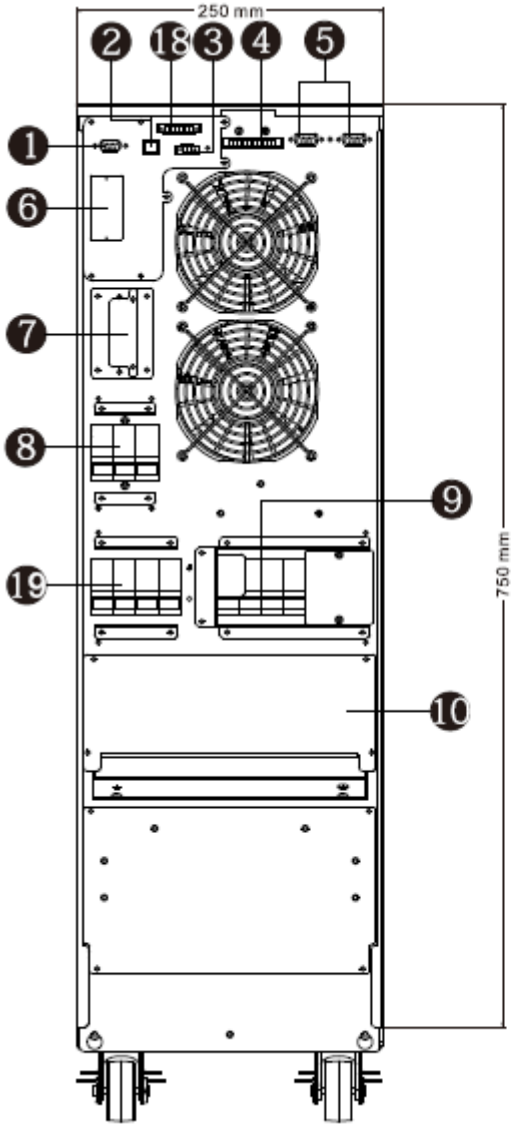

Diagram 1: 10K/15K/20K(L)
Rear Panel

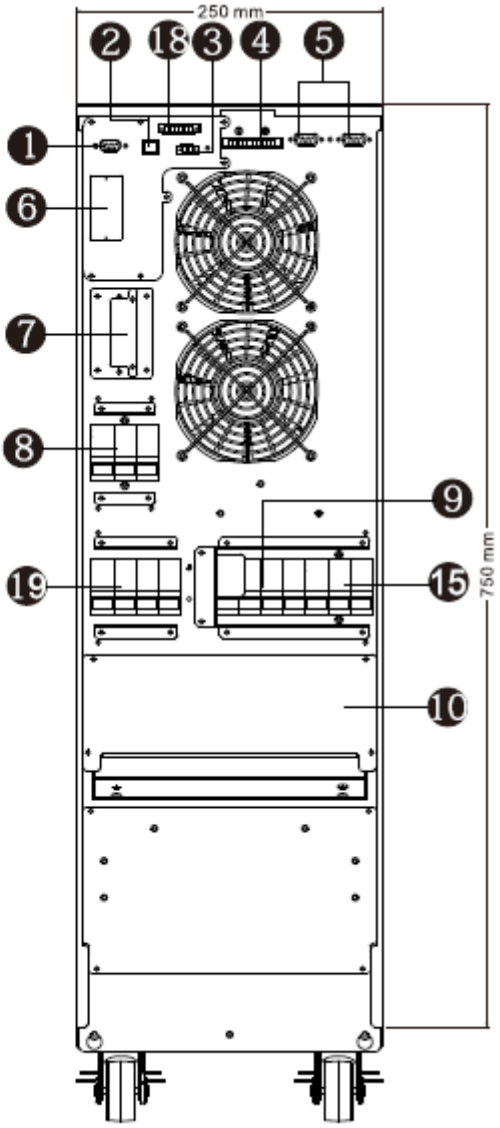

Diagram 2: 10K/15K/20K(L)
DUAL Rear Panel

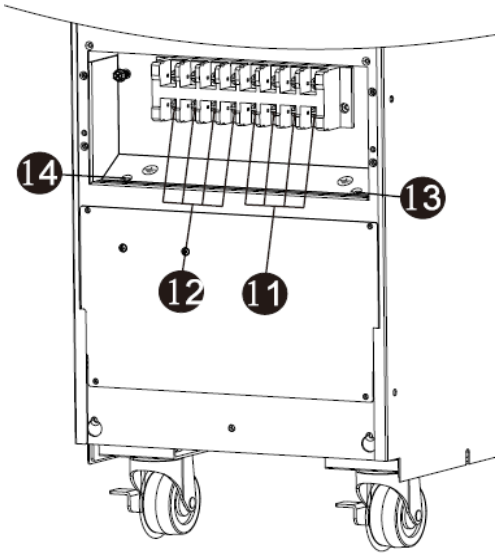

Diagram 3: 10K/15K/20K(L)
Input/Output Terminal

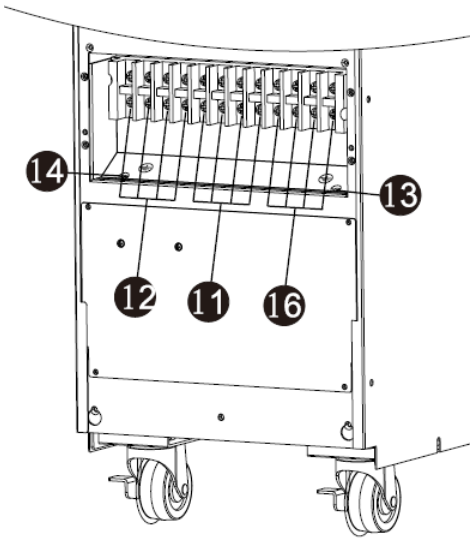

Diagram 4: 10K/15K/20K(L)
DUAL Input/Output Terminal

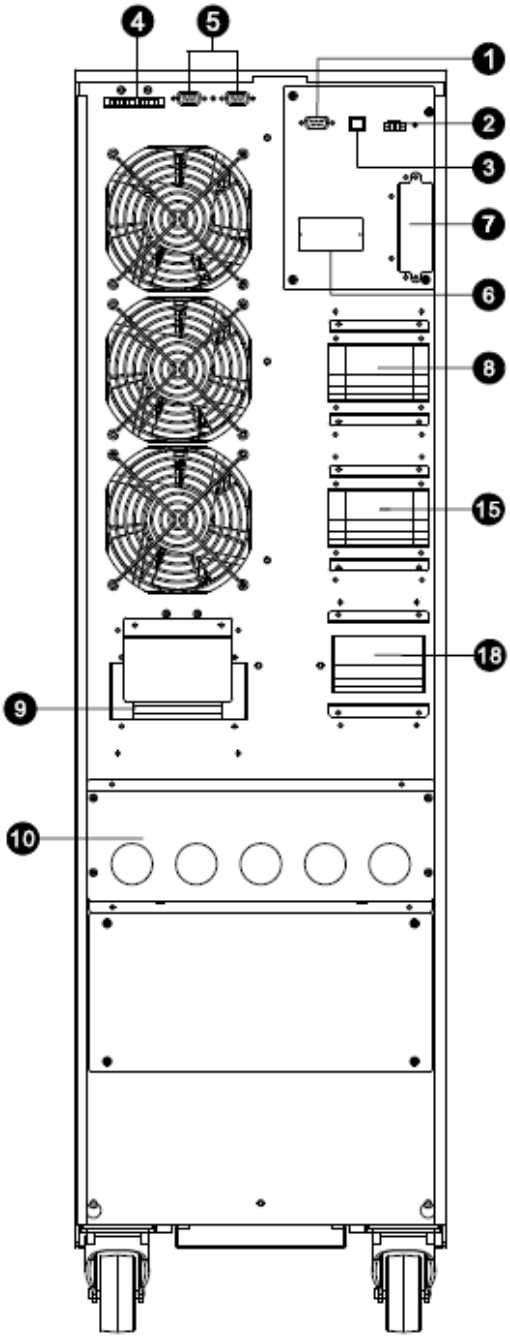

Diagram 5: 30K(L) Rear Panel

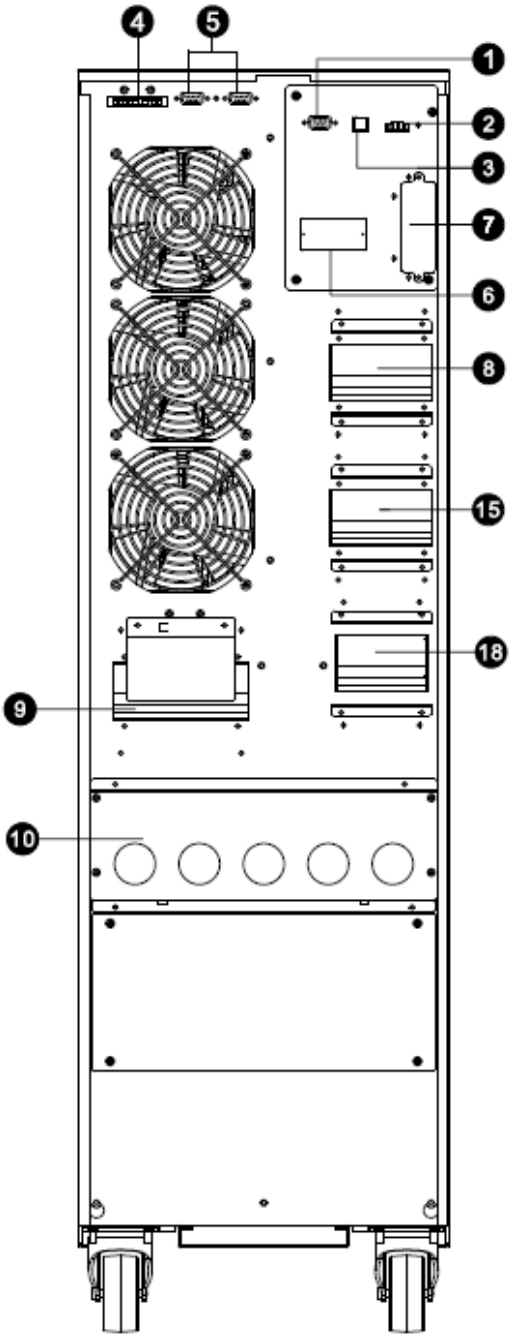

Diagram 6: 40K(L) Rear Panel

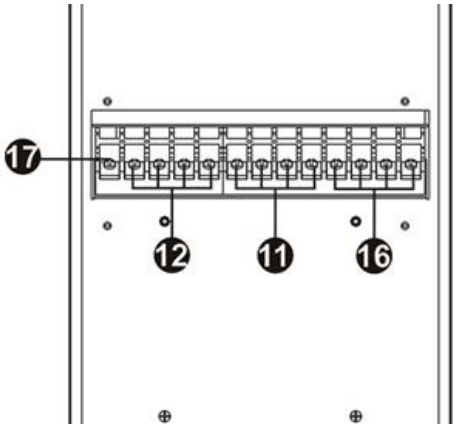

Diagram 7: 30K(L) / 40K(L) Dual Input Input/Output Terminal

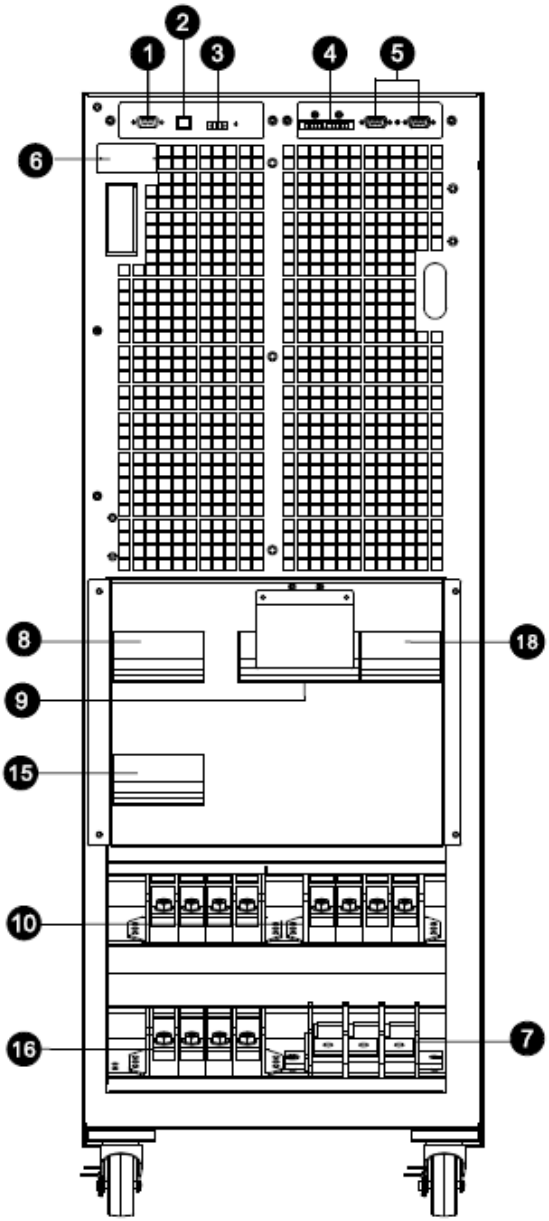

Diagram 8: 60KL front view with door open

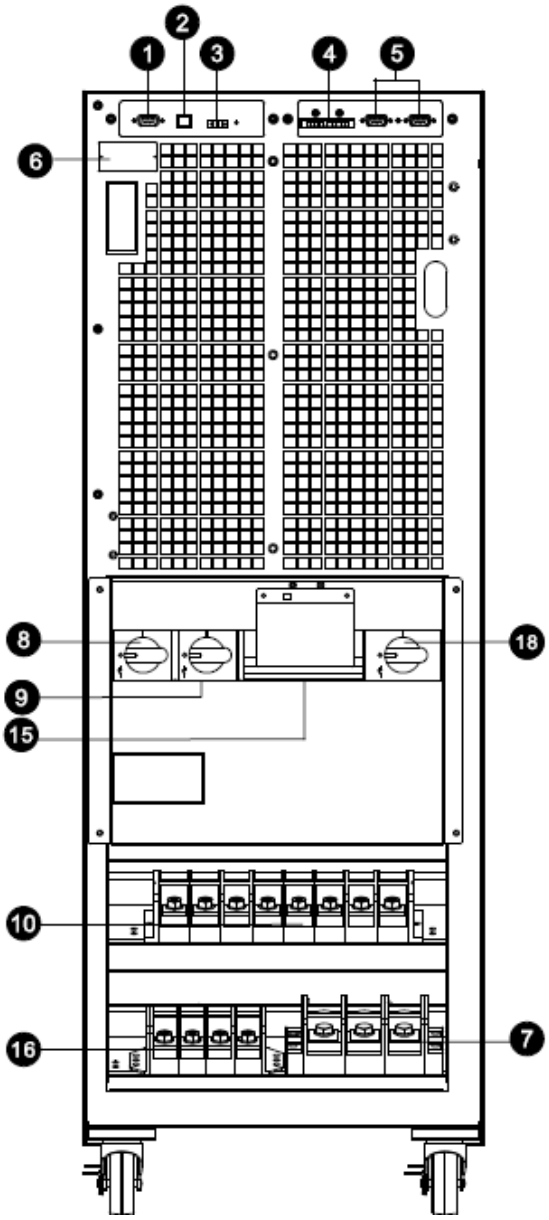

Diagram 9: 80KL front view with door open

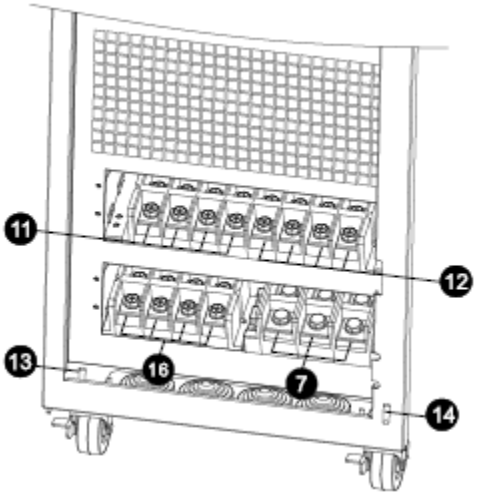

Diagram 10: 60KL/ 80KL Input/Output Terminal

1. RS-232 communication port
2. USB communication port
3. Emergency power off function connector (EPO connector)
4. Share current port (only available for parallel model)
5. Parallel port (only available for parallel model)
6. Intelligent slot
7. External battery connector/terminal (Only available for long-run model)
8. Line input circuit breaker/switch
9. Maintenance bypass switch (option)
10. Input/Output terminal (Refer to diagram 3, 4, 7 and 10 for the details)
11. Line input terminal
12. Output terminal
13. Input grounding terminal
14. Output grounding terminal
15. Bypass input circuit breaker/switch
16. Bypass input terminal
17. Grounding terminal
18. Output switch

2-3. Single UPS Installation

Installation and wiring must be carried out in accordance with the local electric laws and regulations by trained professionals.

1) Make sure that the mains wire and breakers of the building are rated for the capacity of the UPS to prevent electric shock or risk of fire.

NOTE: Do not use the wall receptacle as the input power source for the UPS, as its rated current is less than the UPS's maximum input current. The receptacle may be damaged and destroyed.

2) Switch off the mains switch in the building before installation.

3) Turn off all the connected devices before connecting to the UPS.

4) Prepare wires based on the following table:

Model	Current Withstand	Wiring spec (AWG)				
		Input(Ph)	Output(Ph)	Neutral	Battery	Ground
10KL	20A	14	14	10	8	8
15KL	30A	12	12	10	8	8
20KL	40A	10	10	6	8	6
30KL	60A	8	8	4	4	4
40KL	80A	6	6	4	4	4
60KL	120A	4	4	1	1	4
80KL	160A	2	2	1/0	1/0	2

NOTE: The cable for each Model (i.e. 30K) should be able to withstand given current (i.e. 60A). It is recommended to use corresponding cable thickness (here, i.e. AWG 8) or thicker wire for Phase and corresponding (here, i.e. AWG 4) or thicker wire for Neutral for safety and efficiency. The selections for color of wires should be followed by the local electrical laws and regulations.

5) Remove the terminal block cover at the rear panel of UPS. Then connect the wires according to the following terminal block diagrams: (Connect the grounding wire first when making wire connections. Disconnect the earth wire after you disconnect the power wire.)

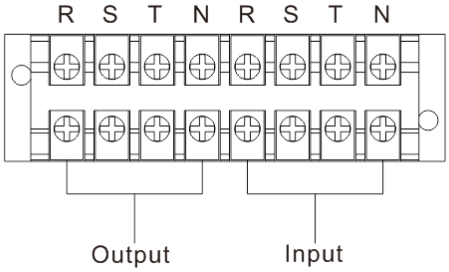

Terminal block wiring diagram for 10K(L)/15K(L)/20K(L)

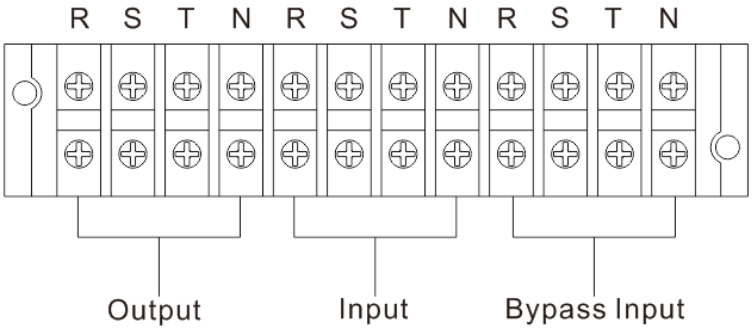

Terminal block wiring diagram for 10K(L)/15K(L)/20K(L)

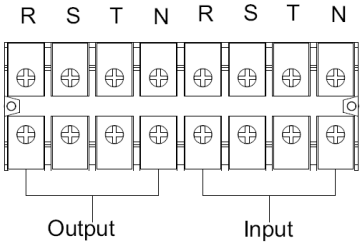

Terminal block wiring diagram for 30K(L)/40K(L)

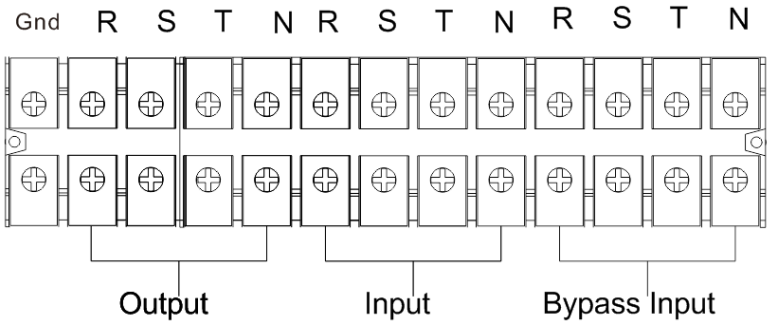

Terminal block wiring diagram for 30K(L) /40K(L)

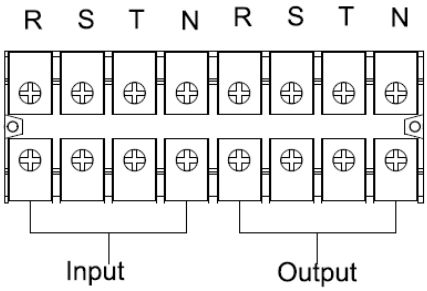

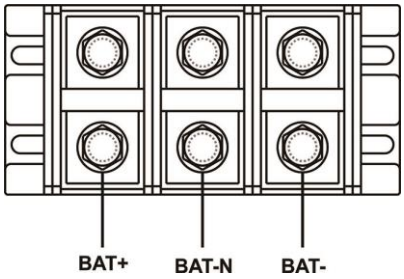

Terminal block wiring diagram HV 60KL/80KL

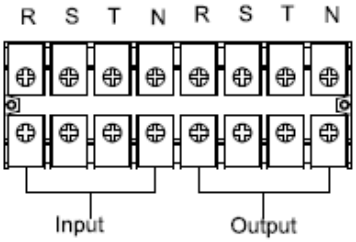

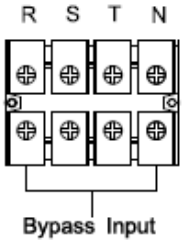

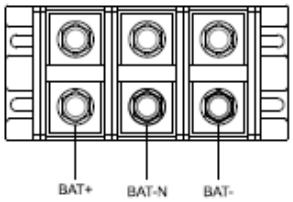

Terminal block wiring diagram for 60KL/80KL

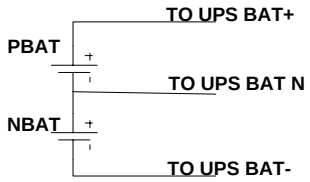

Battery wire connect schematic

NOTE 1: Make sure that the wires are connected tightly with the terminals.

NOTE 2: Please install the output breaker between the output terminal and the load, and the breaker should be qualified with leakage current protective function if necessary.

6) Put the terminal block cover back at the rear panel of the UPS.

Warning: (Only for standard model)

- Make sure the UPS is not turn on before the installation. The UPS should not be turned on during wiring connection.
- Do not attempt to modify the standard model into the long-run model. Particularly, do not try to connect the standard internal battery to the external battery. The battery type and voltage may be different, if you connect them together, it maybe cause the hazard of electric shock or fire!

Warning: (Only for long-run model)

- Make sure a DC breaker or other protective device between UPS and the external battery pack is installed. If not, please install it carefully. Switch off the battery breaker before installation.

NOTE: Set the battery pack breaker in "OFF" position and then install the battery pack.

- Pay highly attention to the rated battery voltage marked on the rear panel. If you want to change the numbers of the battery pack, please make sure you modify the setting simultaneously. The Connection with wrong battery voltage may cause permanent damage of the UPS. Make sure the voltage of the battery pack is correct.
- Pay highly attention to the polarity marking on external battery terminal block. And make sure the correct battery polarity is connected. Wrong connection may cause permanent damage of the UPS.
- Make sure the protective earth ground wiring is correct. The wire current spec, color, position, connection and conductance reliability should be checked carefully.
- Make sure the utility input & output wire is correct. The wire current spec, color, position, connection and conductance reliability should be checked carefully. Make sure the L/N side is correct, not reverse or short-circuited.

2-4. UPS Installation for Parallel System

If the UPS is only available for single operation, you may skip this section to the next.

1) Install and wires the UPS according to the section 2-3.
2) Connect the output wires of each UPS to an output breaker.
3) Connect all output breakers to a major output breaker. Then this major output breaker will directly connect to the loads.
4) Common battery packs or independent battery packs are allowed.
5) Refer to the following wiring diagram:

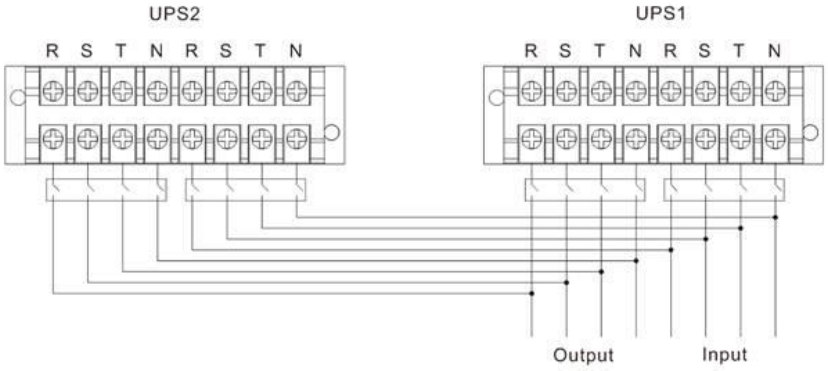

Wiring diagram of parallel system for 10K(L)/15K(L)/20K(L) a

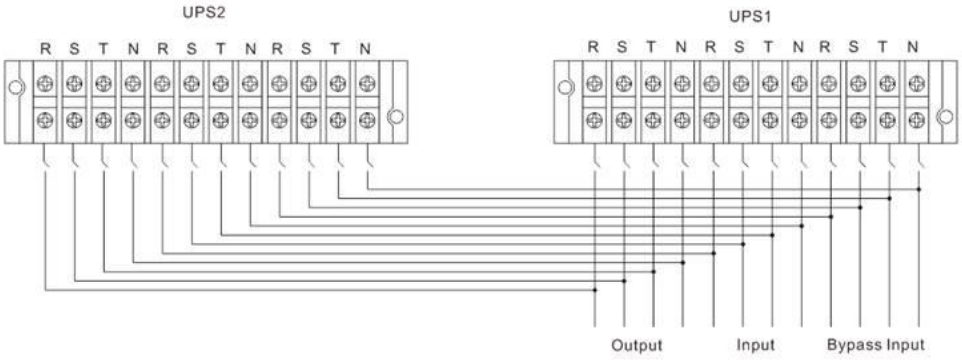

Wiring diagram of parallel system for 10K(L)/15K(L)/20K(L)

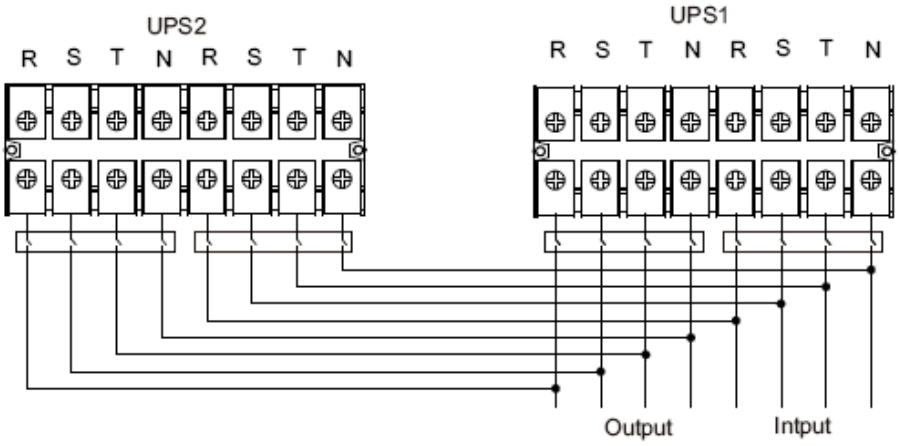

Wiring diagram of parallel system for 30K(L)/40K(L)

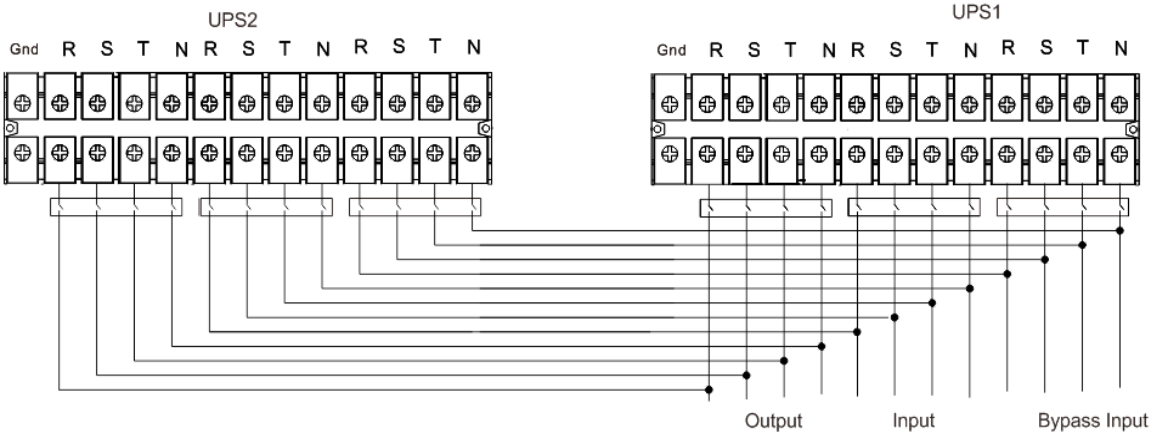

Wiring diagram of parallel system for 30K(L) DUAL/ 40K(L) DUAL

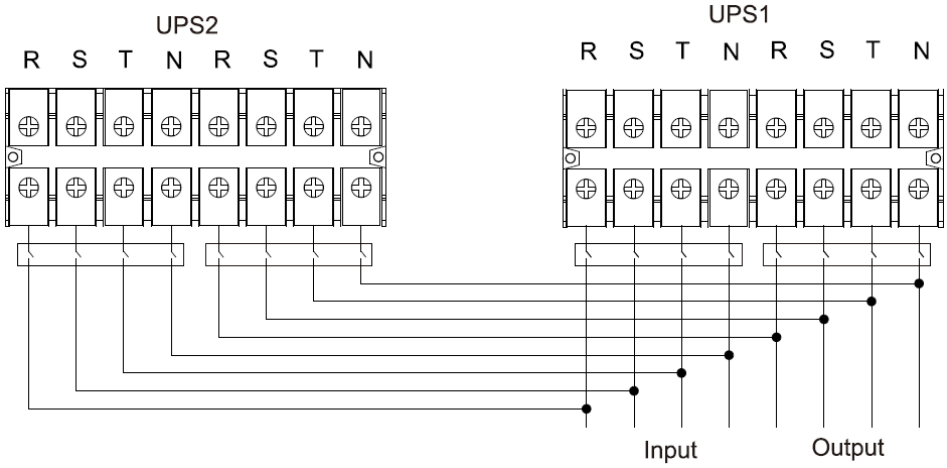

Wiring diagram of parallel system for 60KL/80KL

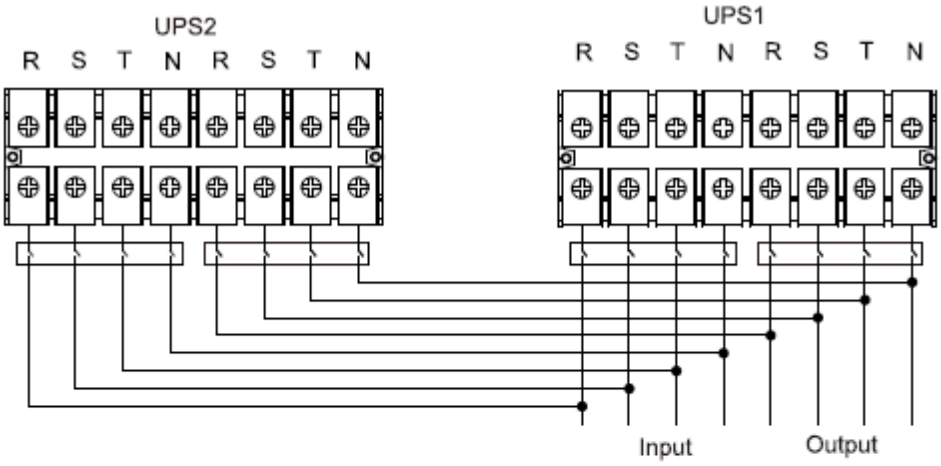

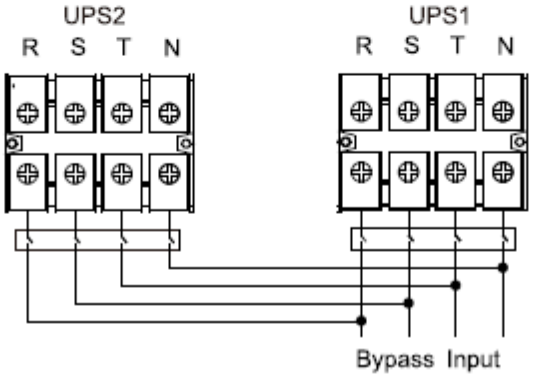

Wiring diagram of parallel system for 60KL/80KL

2-5. Software Installation

For optimal computer system protection, install UPS monitoring software to configure UPS shutdown operation. Please download the newest version from https://viewpower.powerwalker.com

3. Operations

3-1. Button Operation

1) Make sure that the two strings of batteries are connected correctly at UPS's "+,GND,-" terminals and the breaker of the battery pack is at "ON" position (only for long-run model).
2) Press the "Power On" button to set up the power supply for the UPS. UPS will enter into power on mode.

After initialization, UPS will enter into "No Output mode".

3-2. LCD Panel

Touch icon to choose between different menus (1.0, …, 5.0). and enter into the sub-screen.

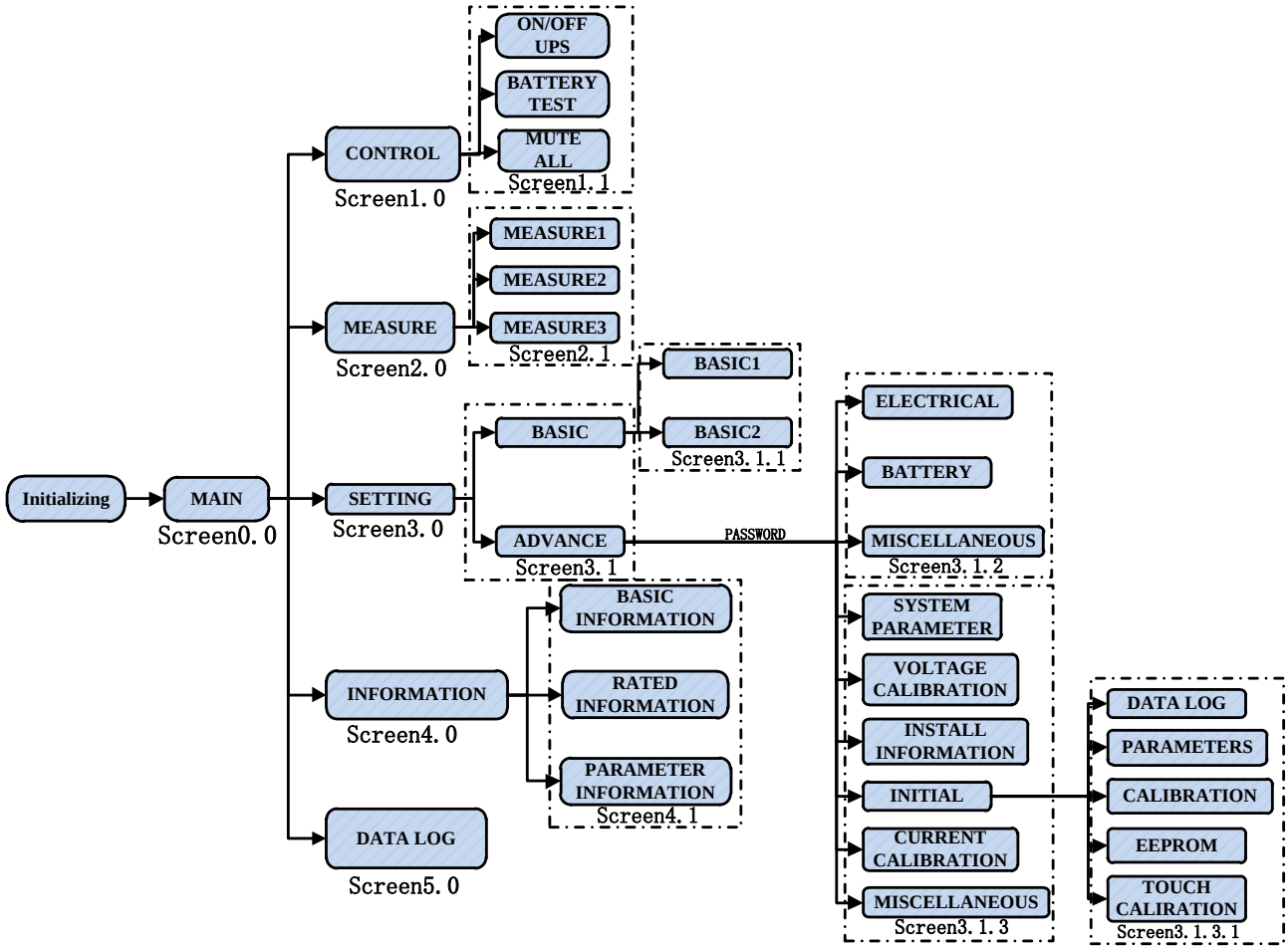

Fig.1 Display messages menus and classification in submenus

Screen 0.0 Main presentation screen , with time and date indication.

Initialization：After power on

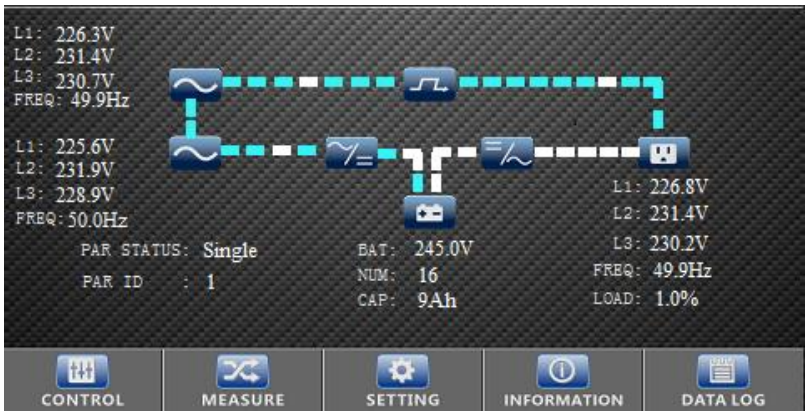

Enter the Icon home( ) from any screen of any submenu , we can go back to main screen (**Screen 0.0**).

Screen 1.0 Control screen, with common control operation.

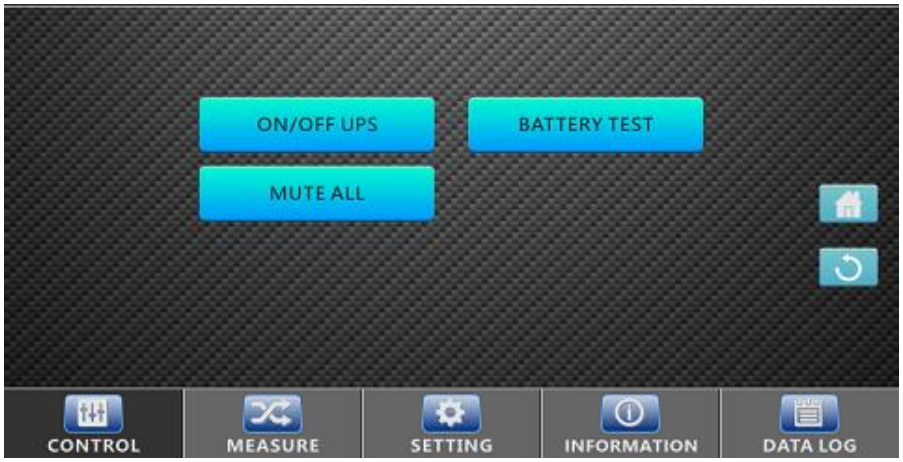

Screens 1.1-1: to start and stop the unit through the control panel.

Enter "YES" to turn on or turn off UPS. And screen will jump to main screen (Screen 0.0).

Enter "BACK" or "No" to come back to Screens 1.0.

On the main screen possible messages about the "TURN ON/OFF UPS" are:

"Turning on……" :UPS is turning on.

"Turning off……" :UPS is turning off.

Screen 1.1-2: to order/cancel a battery test.

Enter "YES" to start Battery Test. Entry "BACK" or "No" to come back to Screens 1.0.

On the main screen possible messages about the battery test are:

"Battery testing……": The battery test is running.

"Battery Test failed": The battery test has been failed.

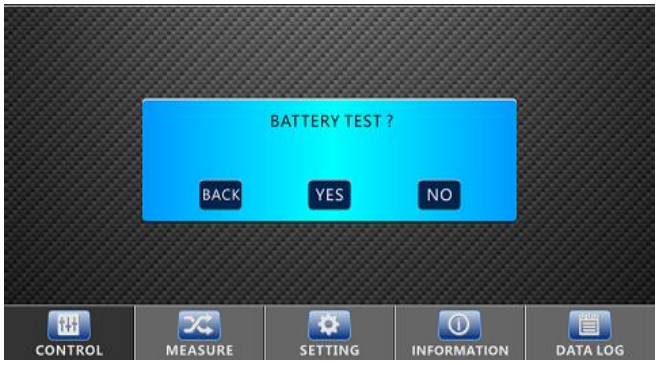

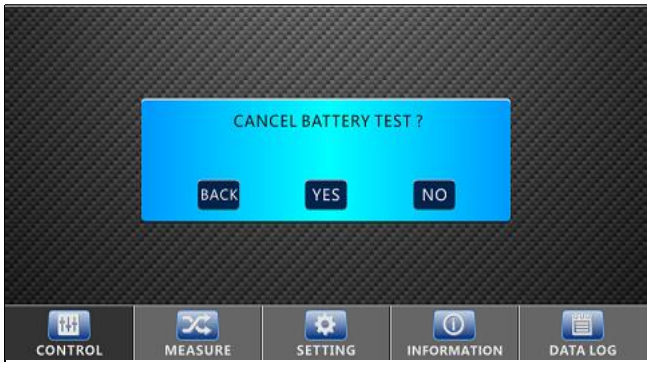

Screen 1.1-3: to order/cancel mute of UPS.

Enter "YES" to make UPS mute. Press "BACK" or "No" icon to come back to Screens 1.0.

"Mute" icon on the main Screen :

The "Mute" icon will show on the top of left corner: 

The jump relationship of CONTROL menu is as shown in figure 10,

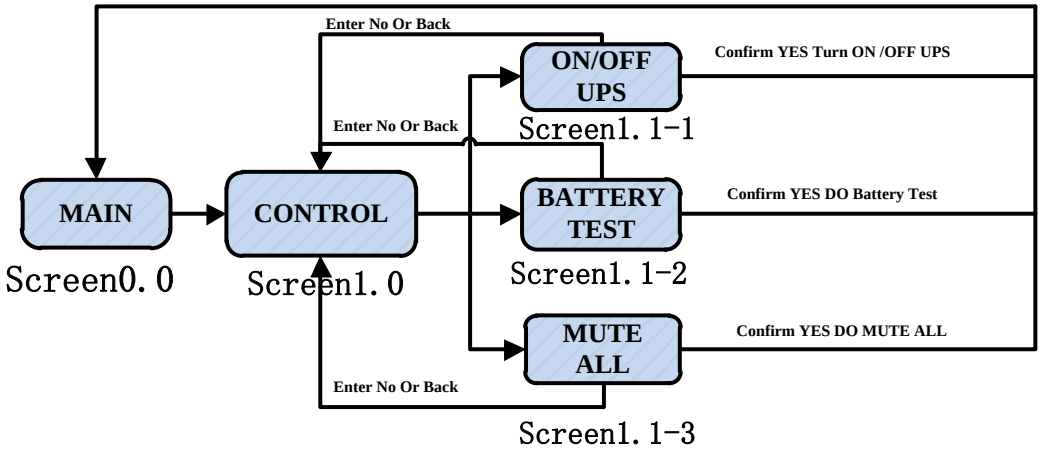

Fig.1 The jump relationship of CONTROL menu (screen1.0)

Screen 2.0 Measure screen.

Screen 2.1-1

- Input voltages phase to phase (units 0.1V).
- input voltages phases to neutral for three phase or single phase(units 0.1V)
- Inverter voltages phase to phase (units 0.1V).
- Inverter voltages phases to neutral for three phase or single phase(units 0.1V)
- Bypass voltages phase to phase (units 0.1V).
- Bypass voltages phases to neutral for three phase or single phase(units 0.1V)
- Output voltages phase to phase (units 0.1V).
- Output voltages phases to neutral for three phase or single phase(units 0.1V)

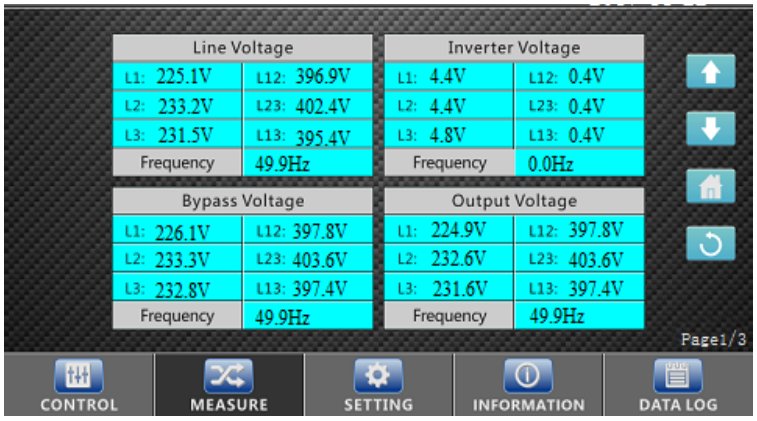

Screen 2.1-2

- Input Watt phases to neutral for three phase or single phase(units W).
- Input VA phases to neutral for three phase or single phase(units VA).
- Output Watt percent phases to neutral for three phase, single phase or total (units %).
- Output VA percent phases to neutral for three phase, single phase or total (units %).
- Battery and Bus voltage (units V).
- Charging and discharging current(units 0.1A).
- Temperature R/S/T (units ℃).

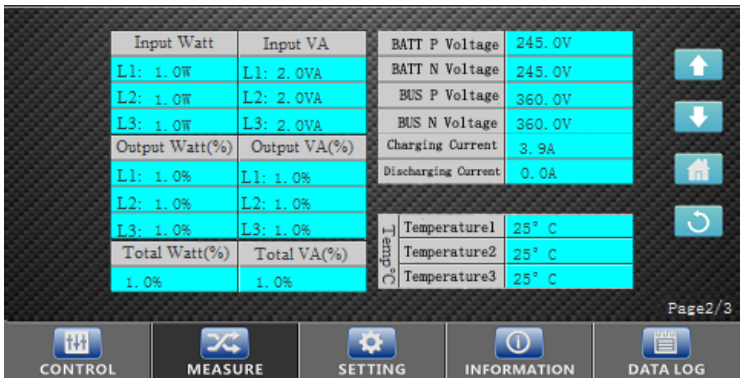

Screen 2.1-3

- Input current phases to neutral for three phase or single phase(units A).
- Output current phases to neutral for three phase or single phase(units A).

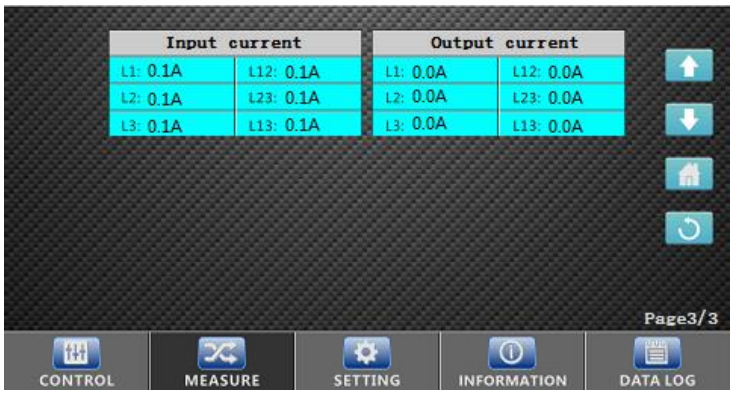

Screen 3.0 Setting screen, with basic and advance operation.

Fig.14 Setting screen

Screens 3.1.1-1

- You can program the time "hh:mm:ss" (hours/minutes/seconds) and the date "dd/mm/yy" (day/month/year).
- You can select the display language between the available options (it may vary).
- You can select input source "Line" or" generator".
- You can program the Modbus Address. The range of addresses goes from 1 to 247.
- You can program the Modbus baud-rate. The options are the following:

"2400"

"4800"

"9600"

"19200"

- You can program the Service Phone, Service contactor, Service mail and Service Address.

Screens 3.1.1-2:

You can program the Mute "ALL mute" and "Mode Mute".

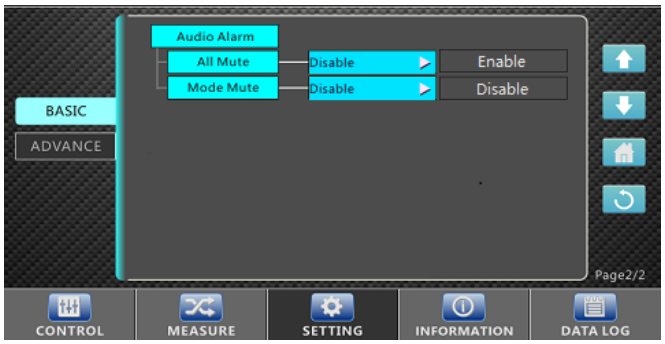

Screens 3.1: At this level an authorized password will be required to modify some advanced parameters.

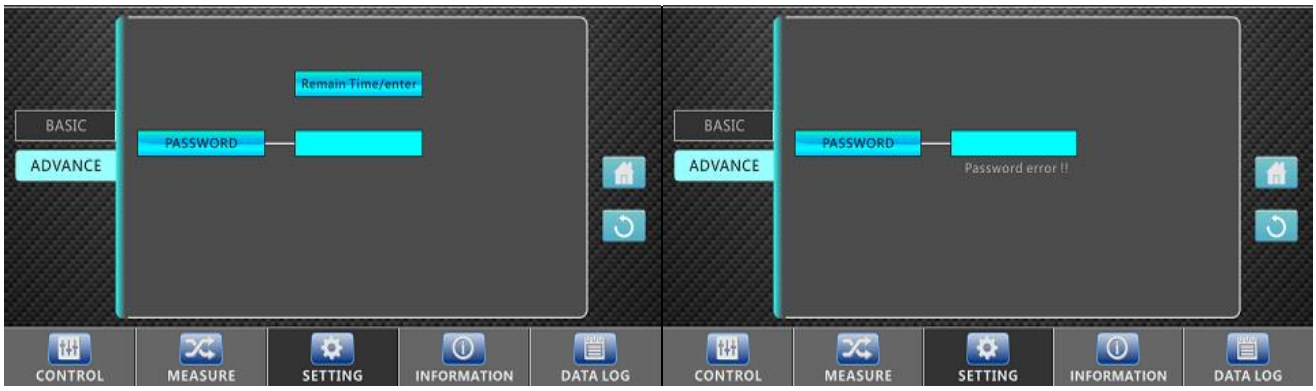

Screens 3.1.2: Advance settings

Screens 3.1.2-1

- You can select the output voltage between the following options: "208V" / "220V" / "230V" / "240V",
- You can select the output frequency between the following options: "50Hz" / "60Hz".

You can select Whether UPS is enable or disable CVCF mode, Bypass output.

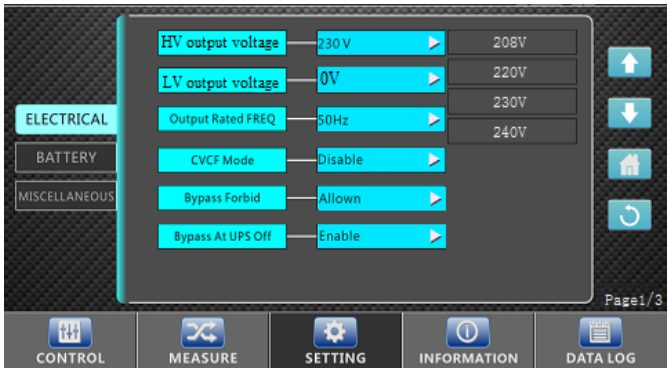

- You can select the bypass voltage range. The range of voltage goes from 176 to 264.
- You can select the bypass frequency range. The range of frequency goes from 46Hz to 54Hz when UPS is 50Hz system and goes from 56 Hz to 64 Hz when UPS is 60Hz system.
- You can select the ECO voltage range. The range of voltage goes from (Vout - 11 V) to(Vout +11V).
- You can select the ECO frequency range. The range of frequency goes from 46Hz to 54Hz when UPS is 50Hz system and goes from 56 Hz to 64 Hz when UPS is 60Hz system.

You can select Whether UPS is enable or disable ECO mode.

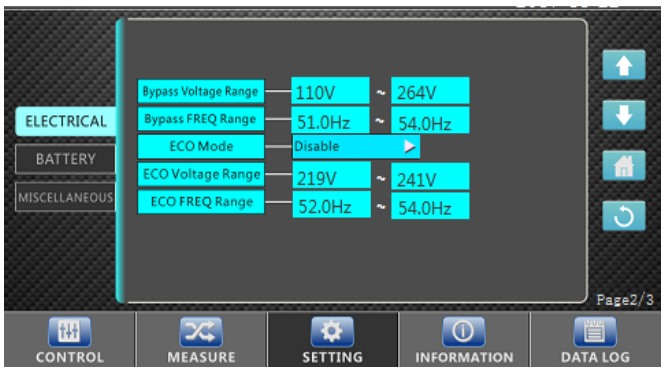

This screen is used for transform voltage and Power display.

- You can select Wire system between "3Ph_4Wire" and "3Ph_3Wire".
- You can select input voltage ratio between the following options:
  - "230/230"
  - "230/277"
  - "120/230"
  - "120/220"
- You can select output voltage ratio between the following options:
  - "230/230"
  - "277/230"
  - "230/120"
  - "220/110"
- You can select output power ratio. The range of ratio goes form 50% to 200%.

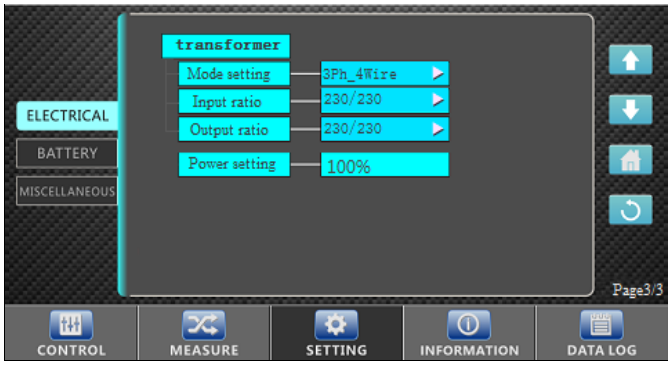

Screens 3.1.2-2: this screen is used for battery setting.

- You can select the battery high and low warning voltage range. The range of high voltage goes from 13.0V to 15.0V.
- The range of shutdown voltage goes from 10.5V to 12V. The range of low voltage depends on shutdown voltage.

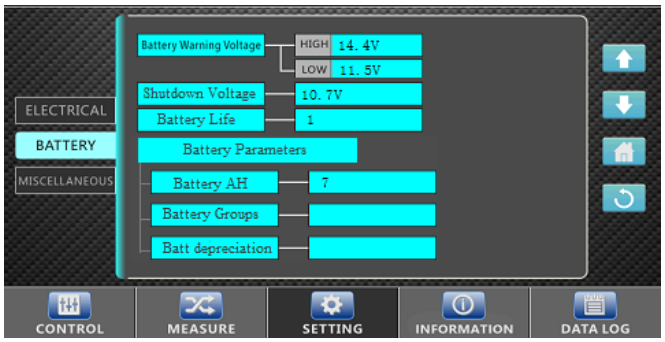

Screen 4.0 UPS Information

To modify the rated values on the screens, it is necessary to introduce the Password on the previous screen 3.0, otherwise they only will be able to be visualized.

- The basic information shows UPS FW version, serial N.O manufacturer, service information,
- The rated information shows output voltage ,output frequency and disable or enable condition.

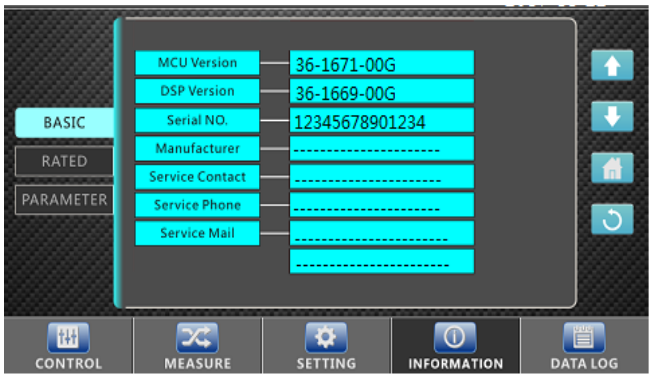

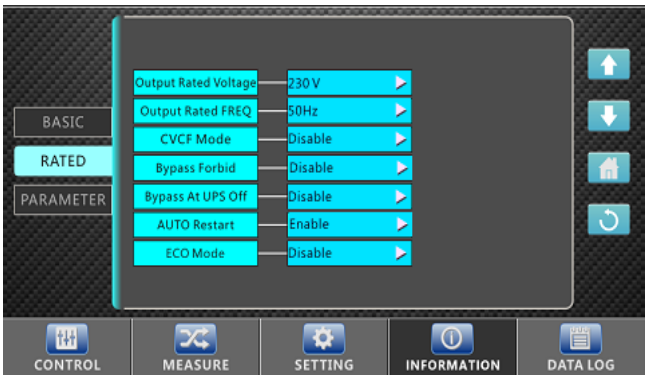

It also shows upper margin and lower margin voltage of the line, bypass and ECO, And upper margin and lower margin frequency of the line, bypass, and ECO.

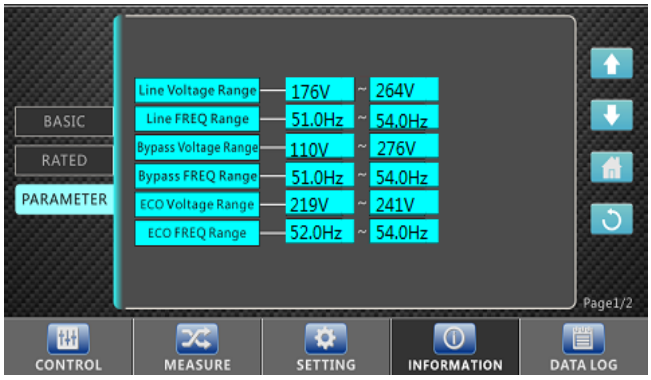

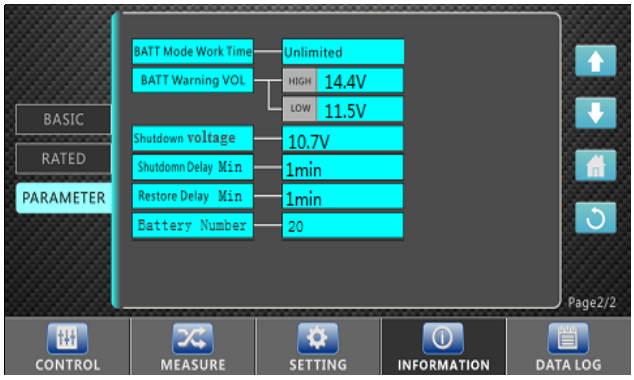

Screen 5.0 UPS Data Log

Figure 24 is showing just only one alarm as an example, but there could be some of them, the active ones. In 3-6 and 3-7 section, there are all the possible alarms displayed in the display LCD.

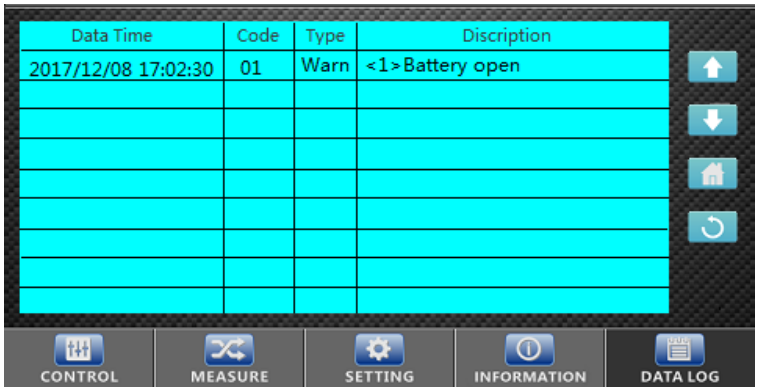

3-3. Audible Alarm

Description	**Buzzer status**	**Muted**
UPS status		
Bypass mode	Beeping once every 2 minutes	Yes
Battery mode	Beeping once every 4 seconds	
Fault mode	Beeping continuously	
Warning		
Overload	Beeping twice every second	No
Others	Beeping once every second	
Fault		
All	Beeping continuously	Yes

3-4. Single UPS Operation

1. Turn on the UPS with utility power (in AC mode)

1) After power supply is connected correctly, set the breaker of the battery pack at "ON" position (this step only necessary for long-run model). Then set the line input breaker at "ON" position. At this time the fan is running and the UPS enter to power on mode for initialization, several seconds later, UPS operates in Bypass mode and supplies power to the load via the bypass.

   NOTE: When UPS is in Bypass mode, the output voltage will directly power from utility after you switch on the input breaker. In Bypass mode, the load is not protected by the UPS. To protect your precious devices, you should turn on the UPS. Refer to next step.

2) Refer to **Screens 1.1-1.**

3) A few seconds later, the UPS will enter into AC mode. If the utility is abnormal, the UPS will operate in Battery mode without interruption.

   NOTE: When the UPS running out battery, it will shut down automatically at Battery mode. When the utility is restored, the UPS will auto restart in AC mode.

2. Turn on the UPS without utility power supply (in Battery mode)

1) Make sure that the two strings of batteries are connected correctly at UPS's "+,GND,-" terminals and the breaker of the battery pack is at "ON" position (only for long-run model).

2) Press the "Power-On" button to set up the power supply for the UPS. UPS will enter to power on mode. After initialization, UPS will enter to No Output mode, then refer to **Screens 1.1-1.**

3) A few seconds later, the UPS will be turned on and enter to Battery mode.

3. Connect devices to UPS

After the UPS is turned on, you can connect devices to the UPS.

1) Turn on the UPS first and then switch on the devices one by one. The LCD panel will display total load level.

2) If it is necessary to connect the inductive loads such as a printer, the in-rush current should be calculated carefully to see if it meets the capacity of the UPS, because the power consumption of this kind of loads is too big.

3) If the UPS is overload, the buzzer will beep twice every second.

4) When the UPS is overload, please remove some loads immediately. It is recommended to have the total loads connected to the UPS less than 80% of its nominal power capacity to prevent overload for system safety.

5) If the overload time is over acceptable time listed in spec at AC mode, the UPS will automatically transfer to Bypass mode. After the overload is removed, it will return to AC mode. If the overload time is over acceptable time listed in spec at Battery mode, the UPS will become fault status. At this time, if bypass is enabled, the UPS will power to the load via bypass. If bypass function is disabled or the input power is not within bypass acceptable range, it will cut off output directly.

4. Charge the batteries

1) After the UPS is connected to the utility power, the charger will charge the batteries automatically except in battery mode or during battery self-test or overload or battery high voltage.

2) Suggest to charge batteries at least 10 hours before use. Otherwise, the backup time may be shorter than expected.

5. Battery mode operation

1) When the UPS is in Battery mode, the buzzer will sound according to different battery capacity. If the battery capacity is more than 25%, the buzzer will beep once every 4 seconds. If the battery voltage drops to the alarm level, the buzzer will beep quickly (once every sec) to remind users that the battery is at low level and the UPS will shut down automatically soon. Users could switch off some non-critical loads to disable the shutdown alarm and prolong the backup time. If there is no more load to be switched off at that time, you have to shut down all loads as soon as possible to protect the devices or save data. Otherwise, there is a risk of data loss or load failure.

2) In Battery mode, if buzzer sound annoy, users can press the Mute button to disable the buzzer.

3) The backup time of the long-run model depends on the external battery capacity.

4) The backup time may vary from different environment temperature and load type.

5) When setting backup time for 16.5 hours (default value from LCD menu), after discharging 16.5 hours,

UPS will shut down automatically to protect the battery. This battery discharge protection can be enabled or disabled through LCD panel control. (Refer to 3-7 LCD setting section).

6. Test the batteries

1) If you need to check the battery status when the UPS is running in AC mode/CVCF mode, you could refer to **Screen 1.1-2**.
2) Users also can set battery self-test through monitoring software.

7. Turn off the UPS with utility power supply in AC mode

1) Refer to **Screens 1.1-1**.

   NOTE 1: If the UPS has been set to bypass output, it will bypass voltage from the utility power to output terminal even though you have turned off the UPS (inverter).

   NOTE 2: After turning off the UPS, please be aware that the UPS is working at Bypass mode and there is risk of power loss for connected devices.
2) In Bypass mode, output voltage of the UPS is still present. In order to cut off the output, switch off the line input breaker(for dual input unit, also switch off the bypass line breaker). A few seconds later, there is no display shown on the display panel and UPS is complete off.

8. Turn off the UPS without utility power supply in Battery mode

1) Refer to **Screens 1.1-1**.
2) Then UPS will cut off power to output and there is no display shown on the display panel.

9. Mute the buzzer

1) Refer to **Screen 1.1-3.**
2) Some warning alarms can't be muted unless the error is fixed. Please refer to section 3-3 for details.

10. Operation in warning status

1) When Fault LED illuminates and the buzzer beeps once every second, it means that there are problems for UPS operation. Users can get the warning indicator from LCD panel. Please check the trouble shooting table in Chapter 4 for details.
2) Some warning alarms can't be muted unless the error is fixed. Please refer to section 3-3 for details.

11. Operation in Fault mode

1) When Fault LED illuminates and the buzzer beeps continuously, it means that there is a fatal error in the UPS. Users can get the fault code from display panel. Please check the trouble shooting table in Chapter 4 for details.
2) Please check the loads, wiring, ventilation, utility, battery and so on after the fault occurs. Don't try to turn on the UPS again before solving the issue. If the problems can't be fixed, please contact the distributor or service personnel immediately.
3) For emergency case, please cut off connection from utility, external battery, and output immediately to avoid more risk or danger.

12. Operation in maintaining bypass mode

This operation is only available for professional or qualified technicians.

When the UPS needs to repair or service and then the load can't be shut off, the UPS needs to turn to maintenance mode.

1) First, turn off the UPS.

2) Second, remove the cover of maintenance bypass switch on the panel.

3) Third, turn the maintenance switch to "BPS" position and turn off the UPS input breaker and output breaker.

3-5. Parallel Operation

1. Parallel system initial startup

Please make sure that all of the running UPSs are parallel models and have the same configuration.

1) Turn on each UPS in AC mode respectively (Refer to section 3-4(1)). Then, measure the inverter output voltage of each phase for each UPS to if the inverter voltage difference between actual output and

setting value is less than 1.5V(typical 1V) with multimeter. If the difference is more than 1.5V, please calibrate the voltage by configuring inverter voltage adjustment(Refer to Program 15,16 and 17,section 3-7) in LCD setting. If the voltage remains more than 1.5V after calibration, please contact your local distributor or service center for help.

2) Calibrate the output voltage measurement by configuring output voltage calibration(Refer to Program 18,19, and 20, section 3-7) in LCD setting to make sure the difference between real output voltage and detected value of UPS is less than 1V.

3) Turn off each UPS (Refer to section 3-4(7.)). Then, follow the wiring procedure in section 2-4.

4) Remove the cover of parallel share current cable port on the UPS, connect each UPS one by one with the parallel cable and share current cable, and then screw the cover back.

5) **Turn on the parallel system in AC mode:**

   a) Turn on the line input breaker of each UPS (for dual input, also turn on bypass input breaker). After all UPSs enter to bypass mode, measure the output voltage between two UPSs for the same phase to make sure the phase sequence is correct. If these two voltage differences are near to zero, that means all connections are met. Otherwise, please check if the wirings are connected correctly.

   b) Turn on the output breaker of each UPS.

   c) Turn on each UPS in turns. After a while, the UPSs will enter to AC mode synchronously and then, the parallel system is now complete.

6) **Turn on the parallel system in Battery mode:**

   a) Turn on the battery breaker (only available in long-run model) and output breaker of each UPS.

   b) Turn on any UPS. A few seconds later, the UPS will enter to battery mode.

   c) Turn on another UPS. A few seconds later, the UPSs enter to Battery mode and add to the parallel system.

   d) If you have the third UPS, follow the same procedure of c). Then, the parallel system is complete.

If more detail information is needed, please contact supplier or service center for parallel operation instruction.

2. Add new units into the parallel system

1) You can't add one new unit into the parallel system when whole system is running. You must cut off the load and shutdown the system.

2) Make sure all of the UPS are the parallel models, and follow the wiring refer to section 2-4.

3) Install the new parallel system refers to the previous section.

3. Remove units from the parallel system

There are two methods to remove units from the parallel system:

First method:

1) Press the "OFF" iron twice. Then, the UPS will enter into Bypass mode or No Output mode without output.

2) Turn off the output breaker of this unit, and then turn off the input breaker of this unit.

3) After it shuts down, you can turn off the battery breaker (for long-run model) and remove the parallel and share current cables. And then remove the unit from the parallel system.

Second method:

1) If the bypass is abnormal, you can not remove the UPS without interruption. You must cut off the load and shut down the system first.

2) Make sure the bypass setting is enabled in each UPS and then turn off the running system. All UPSs will transfer to Bypass mode. Remove all the maintenance bypass covers and set the maintenance switches from "UPS" to "BPS" position. Turn off all the input breakers and battery breakers in parallel system.

3) Turn off the output breaker and remove the parallel cable and share current cable of the UPS which you want to remove. Now, you can remove the UPS from parallel system.

4) Turn on the input breaker of the remaining UPS and the system will transfer to Bypass mode. Set the maintenance switches from "BPS" to "UPS position and put the maintenance bypass covers back on.

5) Turn on the remaining UPS according to the previous section.

Warning: (Only for the parallel system)

- Before turning on the parallel system to activate inverter, make sure that all unit's maintenance switch at the same position.
- When parallel system is turned on, please do not operate the maintenance switch of any unit.
- Please Do NOT enable the ECO mode in parallel system.

3-6. Fault Code

Fault code	Fault event	Icon	Fault code	Fault event	Icon
01	Bus start failure	None	42	DSP communication failure	None
02	Bus over	None	43	Overload	None
03	Bus under	None	46	Incorrect UPS setting	None
04	Bus unbalance	None	47	MCU communication failure	None
06	Converter over current	None	48	Two DSP firmware versions are incompatible in parallel system.	None
11	Inverter soft start failure	None	60	Bypass phase short circuited	None
12	High inverter voltage	None	61	Bypass SCR short circuited	None
15	Inverter B output(line to neutral) short circuited	None	62	Bypass SCR open circuited	None
16	Inverter C output(line to neutral) short circuited	None	63	Voltage waveform abnormal in A phase	None
17	Inverter A-B output (line to line) short circuited	None	64	Voltage waveform abnormal in B phase	None
18	Inverter B-C output (line to line) short circuited	None	65	Voltage waveform abnormal in C phase	None
19	Inverter C-A output (line to line) short circuited	None	66	Inverter current detect abnormal	None
1A	Inverter A negative power fault	None	67	Bypass O/P short circuited	None
1B	Inverter B negative power fault	None	68	Bypass O/P line to line short circuited	None
1C	Inverter C negative power fault	None	69	Inverter SCR short circuited	None
21	Battery SCR short circuited	None	6C	BUS voltage drops too fast	None
23	Inverter relay circuited open	None	6D	Current error value detect	None
24	Inverter relay short circuited	None	6E	SPS power error	None
25	Line wiring fault	None	6F	Battery polarity reverse	None
31	Parallel communication failure	None	71	PFC IGBT over-current in A phase	None
32	The host signal failure	None	72	PFC IGBT over-current in B phase	None
33	Synchronous signal failure	None	73	PFC IGBT over-current in C phase	None
34	Synchronous trigger signal failure	None	74	INV IGBT over-current in A phase	None
35	Parallel communication loss	None	75	INV IGBT over-current in B phase	None
36	Parallel output current unbalance	None	76	INV IGBT over-current in C phase	None
41	Over temperature	None	77	LCD&MCU communication failed	None

3-7.Warning Code

Warning code	Warning event	Warning code	Warning event
01	Battery unconnected	21	Line situations are different in parallel system
02	IP Neutral loss	22	Bypass situations are different in parallel system
04	IP phase abnormal	33	Locked in bypass after overload 3 times in 30 minutes
05	Bypass phase abnormal	34	Converter current unbalanced
07	Over charge	3A	Cover of maintain switch is open
08	Low battery	3C	Utility extremely unbalanced
09	Overload	3D	Bypass is unstable
0A	Fan failure	3E	Battery voltage too high
0B	EPO enable	3F	Battery voltage unbalanced
0D	Over temperature	40	Charger short circuited
0E	Charger failure		

4. Trouble Shooting

If the UPS system does not operate correctly, please solve the problem by using the table below.

Symptom	Possible cause	Remedy
No indication and alarm in the front display panel even though the mains is normal.	The AC input power is not connected well.	Check if input cable firmly connected to the mains.
The warning code 0B.	EPO function is activated. At this time, the EPO switch is in "OFF" status or the jumper is open.	Set the circuit in closed position to disable the EPO function.
The warning code 01.	The external or internal battery is incorrectly connected.	Check if all batteries are connected well.
The warning code 09.	UPS is overload.	Remove excess loads from UPS output.
	UPS is overloaded. Devices connected to the UPS are fed directly by the electrical network via the Bypass.	Remove excess loads from UPS output.
	After repetitive overloads, the UPS is locked in the Bypass mode. Connected devices are fed directly by the mains.	Remove excess loads from UPS output first. Then shut down the UPS and restart it.
Fault code is shown as 43.	UPS is overload too long and becomes fault. Then UPS shut down automatically.	Remove excess loads from UPS output and restart it.
Fault code is shown as 14, 15, 16, 17, 18 or 19,	The UPS shut down automatically because short circuit occurs on the UPS output.	Check output wiring and if connected devices are in short circuit status.
Other fault codes are shown on LCD display and alarm beeps continuously.	A UPS internal fault has occurred.	Contact your dealer
Battery backup time is shorter than nominal value.	Batteries are not fully charged.	Charge the batteries for at least 7 hours and then check capacity. If the problem still persists, consult your dealer.
	Batteries defect	Contact your dealer to replace the battery.

Symptom	Possible cause	Remedy
The warning code 0A.	Fan is locked or not working. Or the UPS temperature is too high.	Check fans and notify dealer.
The warning code 02.	The input neutral wire is disconnected.	Check and correct the input neutral connection. If the connection is ok and the warning is still displaying, please refer to the LCD setting section, to enter the neutral loss check menu, to see if the parameter3 is "CHE". If it is, please press the "Enter" key firstly to make the "CHE" flash and press the "Enter" key secondly to make the UPS clear the alarm. If the warning still exists, please check input fuses of L2 and L3.
	The L2 or L3 input fuse is broken.	Replace the fuse.

5. Storage and Maintenance

5-1. Storage

Before storing, charge the UPS at least 7 hours. Store the UPS covered and upright in a cool, dry location.

During storage, recharge the battery in accordance with the following table:

Storage Temperature	Recharge Frequency	Charging Duration
-25°C - 40°C	Every 3 months	1-2 hours
40°C - 45°C	Every 2 months	1-2 hours

5-2. Maintenance

⚠ The UPS system operates with hazardous voltages. Repairs may be carried out only by qualified maintenance personnel.

⚠ Even after the unit is disconnected from the mains, components inside the UPS system are still connected to the battery packs which are potentially dangerous.

⚠ Before carrying out any kind of service and/or maintenance, disconnect the batteries and verify that no current is present and no hazardous voltage exists in the terminals of high capability capacitor such as BUS-capacitors.

⚠ Only persons are adequately familiar with batteries and with the required precautionary measures may replace batteries and supervise operations. Unauthorized persons must be kept well away from the batteries.

⚠ Verify that no voltage between the battery terminals and the ground is present before maintenance or repair. In this product, the battery circuit is not isolated from the input voltage. Hazardous voltages may occur between the battery terminals and the grounding/earthing.

⚠ Batteries may cause electric shock and have a high short-circuit current. Please remove all wristwatches, rings and other metal person objects before maintenance or repair, and only use tools with insulated grips and handles for maintaining or repairing.

⚠ When replace the batteries, install the same number and same type of batteries.

⚠ Do not attempt to dispose of batteries by burning them. This could cause battery explosion. The batteries must be deposed according to local environmental regulations.

⚠ Do not open or destroy batteries. Escaping electrolyte can cause injury to the skin and eyes. It may be toxic.

⚠ Please replace the fuse only with the same type and amperage in order to avoid fire hazards.

⚠ Do not disassemble the UPS system.

6. Specifications

MODEL		10K	15K / 20K	30K	40K	60K	80K
CAPACITY*		10KVA / 10KW	15KVA / 15KW 20KVA / 20KW	30KVA / 30KW	40KVA / 40KW	60KVA / 60KW	80KVA / 80KW
INPUT							
Voltage Range	Low Line Loss	110 VAC(Ph-N) ± 3 % at 50% Load 176 VAC(Ph-N) ± 3 % at 100% Load					
	Low Line Comeback	Low Line Loss Voltage + 10V					
	High Line Loss	300 VAC(L-N) ± 3 % at 50% Load 276 VAC(L-N) ± 3 % at 100% Load					
	High Line Comeback	High Line Loss Voltage - 10V					
Frequency Range		46Hz ~ 54 Hz @ 50Hz system 56Hz ~ 64 Hz @ 60Hz system					
Phase		3 Phase with Neutral					
Power Factor		≧ 0.99 at 100% Load					
OUTPUT							
Phase		3 Phase with Neutral					
Output voltage		360/380/400/415VAC (Ph-Ph)					
		208*/220/230/240VAC (Ph-N)					
AC Voltage Regulation		± 1%					
Frequency Range (Synchronized Range)		46Hz ~ 54 Hz @ 50Hz system 56Hz ~ 64 Hz @ 60Hz system					
Frequency Range (Batt. Mode)		50 Hz ± 0.1 Hz or 60Hz ± 0.1 Hz					
Overload	AC mode	100%~110%: 60min; 110%~125%: 10min; 125%~150%:1min;>150% : immediately					
	Battery mode	100%~110%: 60min; 110%~125%: 10min; 125%~150%:1min;>150% : immediately					
Current Crest Ratio		3:1 max					
Harmonic Distortion		≦ 2 % @ 100% Linear Load; ≦ 5 % @ 100% Non-linear Load					
Transfer Time	Line←→Battery	0 ms					
	Inverter←→Bypass	0 ms (When phase lock fails, <4ms interruption occurs from inverter to bypass)					
	Inverter←→ECO	<10 ms					
EFFICIENCY							
AC mode		95.5%					
Battery Mode		94.5%					
BATTERY							
Standard Model	Type	12 V / 7 Ah	12 V / 9 Ah	12 V / 7 Ah	12 V / 9 Ah	N/A	
	Numbers	(10+10)pcs	(16+16)pcs x 2 strings				
	Recharge Time	9 hours recover to 90% capacity					
	Charging Current (max)	2.0 A ± 10% (Recommended); 1.0~12.0A (Adjustable)					
	Charging Voltage	+/-136.5 VDC ± 1%	+/-218 VDC ± 1%				
Long-run Model	Type	Depending on applications					
	Numbers	20	32 ~ 40 (adjustable)				
	Charging Current(max.)	1.0~12.0A ±10% (Adjustable)				2.0~24.0A ±10% (Adjustable)	
	Charging Voltage	+/- 13.65 VDC * N ± 1% (N = 16~20)					
PHYSICAL							
Standard **(BI)**	Dimension, D X W X H (mm)	626 x 250 x 750		815 x 300 x 1000		N/A	
	Net Weight (kgs)	124/126	139/141	225/230	250/260		
Long-run **(BX)**	Dimension, D X W X H mm	626 x 250 x 750		815 x 300 x 1000		790 x 360 x 1010	
	Net Weight (kgs)	28/30	43/45	60/65	61/71	108/112	113/117
ENVIRONMENT							
Operation Temperature		0 ~ 40°C (the battery life will down when > 25°C)					
Operation Humidity		<95 % and non-condensing					
Operation Altitude**		<1000m**					
Acoustic Noise Level		Less than 55dB @ 1 Meter	Less than 58dB @ 1 Meter	Less than 65dB @1 Meter	Less than 70dB @ 1 Meter	Less than 70dB @ 1 Meter	Less than 75dB @ 1 Meter
MANAGEMENT							
Smart RS-232 or USB		Supports Windows® 2000/2003/XP/Vista/2008/7/8/10, Linux, Unix, and MAC					
Optional SNMP		Power management from SNMP manager and web browser					

* Derate capacity to to 90% when the output voltage is adjusted to 208VAC.
**If the UPS is installed or used in a place where the altitude is above than 1000m, the output power must be derated 1% per 100m.
***Product specifications are subject to change without further notice.